BT899XL-FD

EXTRA-LARGE PROJECTOR CEILING MOUNT
WITH MICRO-ADJUSTMENT

The BT899XL-FD is a fixed drop ceiling mount which has been designed to mount universal projectors up to 55lbs. Available in a choice of 5 pole lengths from just 1.6ft up to 9.8ft, this fixed drop mount features an adjustable ceiling plate ideal for mounting to angled ceilings. The BT899XL-FD is designed with easy adjustment of tilt, roll and swivel, with optional micro-adjustment for short throw projectors.

SPECIFICATIONS

Max load	**55lbs**
Tilt (pitch)	**+ / - 13°**
Roll	**+ / - 6°**
Yaw	**360°**
Ceiling plate tilt	**90°**
Max distance between fixings	**19"**
Color option (Ø2" pole)	**Black**, **White** or **Chrome**

FEATURES

1. Unique 'carousel' mounting plate for universal compatibility
2. Features easy tilt, roll and swivel functions
3. Micro-adjustment feature is ideal for short throw projectors
4. Available in Black, White or Chrome

- Integrated cable management for smart installation
- Security locking screws and Allen key provided for a secure installation
- Suitable for angled ceilings
- Suitable for projectors using M2.5, M3, M4, M5 and M6 fixings
- Available in 5 pole lengths - 1.6ft, 3.2ft, 4.9ft, 6.6ft, 9.8ft

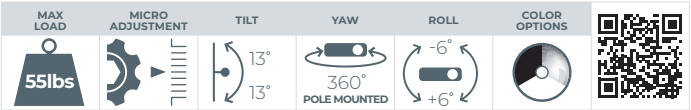

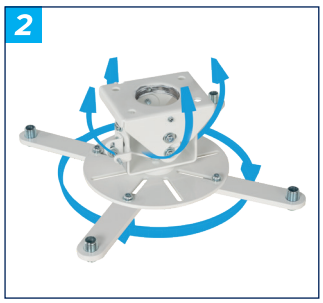

BT899XL-FD

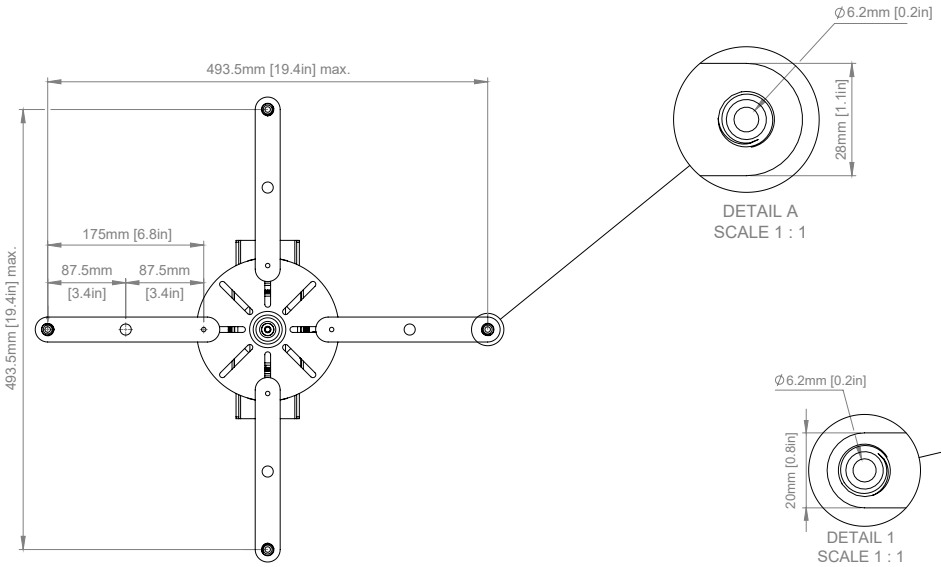

BOTTOM VIEW

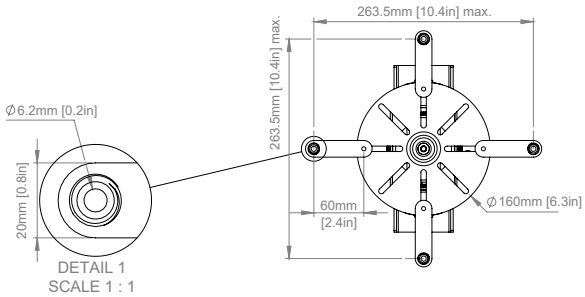

BOTTOM VIEW

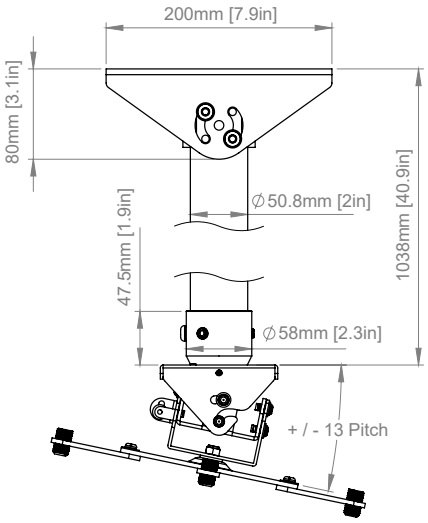

SIDE VIEW

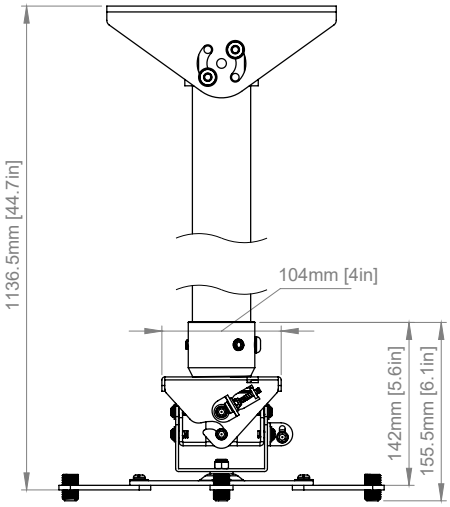

SIDE VIEW

ORDERING INFORMATION

COLOR	ORDER REF	BARCODE	COLOR	ORDER REF	BARCODE
Black	BT899XL-FD050/BB	5019318761171	White	BT899XL-FD150/BW	5019318761386
White	BT899XL-FD050/BW	5019318761362	Chrome	BT899XL-FD150/BC	5019318761225
Chrome	BT899XL-FD050/BC	5019318761188	Black	BT899XL-FD200/BB	5019318761232
Black	BT899XL-FD100/BB	5019318761195	Chrome	BT899XL-FD200/BC	5019318761249
White	BT899XL-FD100/BW	5019318761379	Black	BT899XL-FD300/BB	5019318761256
Chrome	BT899XL-FD100/BC	5019318761201	Chrome	BT899XL-FD300/BC	5019318761263
Black	BT899XL-FD150/BB	5019318761218			

RELATED PRODUCTS

PRODUCT CODE	NAME	DESCRIPTION
BT7850	Ø2" Poles	Available in different lengths up to 9.8ft
BT7822	Ceiling Mount	Securely fixes Ø2" poles to the ceiling
BT7808	Ceiling Mount with Tilt	Ideal for mounting Ø2" poles to angled ceilings
BT899	Projector Ceiling Mount with Micro Adjustment	Maximum distance between fixings 15"

© 2025 B-Tech AV Mounts Corporation Ltd. All rights reserved.
The information in this specification sheet reflects the current technical specifications at the time of print.
We reserve the right to change the technical or physical specifications without prior notice. The B-Tech name and the B-Tech logo are registered trademarks of B-Tech AV Mounts Co. Ltd
All other brands and products are trademarks of their respective owners. All B-Tech images and symbols are exclusive property of B-Tech AV Mounts Co. Ltd
B-Tech accept no liability for loss or damage caused by improper installation or mounting on unsuitable structures. Any reproduction or retransmission or republication of any part of this specification sheet is strictly prohibited, unless prior written permission has been granted by B-Tech AV Mounts Co. Ltd E&OE.

SS-V2-BT899XL-FD-250725