DS-D4512CH-1FQF
DS-D4512CH-1FQF,

The LED Poster Display features an ultra-slim and lightweight design, enhanced by a magnetic butterfly-frame structure for easy installation. It supports seamless splicing of multiple units, enabling both standalone display and quick horizontal combination together. With high brightness and contrast, the display delivers vivid dynamic visuals and ensures excellent image quality from all viewing angles. Multiple installation options are supported, including standard wall-mounting, angled support, and mobile stand setups.

- The cabinet features a highly integrated, lightweight, and streamlined design with a magnetic butterfly-frame, enabling fast horizontal splicing and flexible combinations.
- Incorporates proprietary lossless image processing and ultra-low grayscale control technologies, delivering delicate, smooth visuals and outstanding dynamic color performance.
- Supports multiple remote content management methods, including local control, USB drive input, and PC-based operation.
- Fully self-developed display control system ensures end-to-end stability, security, and controllability. System modules can be easily maintained or replaced, with front-access LED modules supporting single-pixel repairs.
- Allows for multi-unit cascading display with a built-in sending card, eliminating the need for external control devices.
- Multiple installation options available: built-in angled support bracket, mobile stand, wall mount
- Optimized for close-range viewing scenarios with HOB LED panel protection, offering enhanced resistance to moisture, impact, and environmental stress.
- Supports multiple configuration methods including local remote control, software, and web interface, offering more convenient operation.

▪ Specification

Product Model	
Product Model	DS-D4512CH-1FQF
Cabinet	
Pixel configuration	SMD Triad LED (with glue)
Pixel Pitch Category	P1.2
Pixel pitch	1.25 mm
Lamp Bead Dimensions	1.02 x 1.02 mm
Modules Component	Cabinet × 5, single cabinet LED Module (2 × 2)
Dimensions (W × H × D)	600 (W) mm × 1687.5 (H) mm ×29.5 (D) mm (23.622'' × 66.435'' × 1.161'')
Resolution	480*1350
Area	1.0125 ㎡
Weight	5.4 kg
Pixel density	640000 dots/㎡
Lamp board housing	Without housing, glue potting
Cabinet material	Diecasting Aluminium
Maintenance method	Front maintenance
Display	
White balance brightness	600 cd/㎡
Color temperature	1700-15000K adjustable
Viewing angle	160°(H)/160°(V)
Contrast ratio	4000 ： 1
Color uniformity	± 0.003Cx ， Cy
Brightness uniformity	≥ 97%
Processing Performance	
Driving method	Constand Current Driving
Frame frequency	60 Hz
Refresh rate	3840 Hz
Grey level	22 bit+
Power	
Input Voltage	100~240 VAC ± 10%
Max. Consumption	≤460 W/㎡(600nit)
Average Consumption	≤153 W/㎡
Working Environment	
Opration Temperature	-10 ℃ ~40 ℃
Operation Humidity	10%~60%RH
Storage humidity	-20 ℃ ~ 60 ℃
Storage temperature	-20 ℃ ~60 ℃
General	
Package Dimension (W × H × D)	2070 (W) mm × 665 (H) mm × 350 (D) mm (81.5 '' × 26.18 '' × 13.78 '')

Accessory	50 LED lamp beads, 10 IC chips, 1 network cable, 1 power cable, 1 HDMI cable, 1 multilingual user manual, 1 remote control, 1 magnetic adjustment rod, 1 cable clip, 1 Phillips screwdriver, 1 hex key wrench, 1 power cable, 2 spare LED modules, 1 spare HUB Board
Gross Weight	90.5 kg/1 in 1 (199.52 lb.)
Net Weight	89.7354 kg/1 in 1 (197.83 lb.)

▪ Available Model

DS-D4512CH-1FQF

▪ Dimension

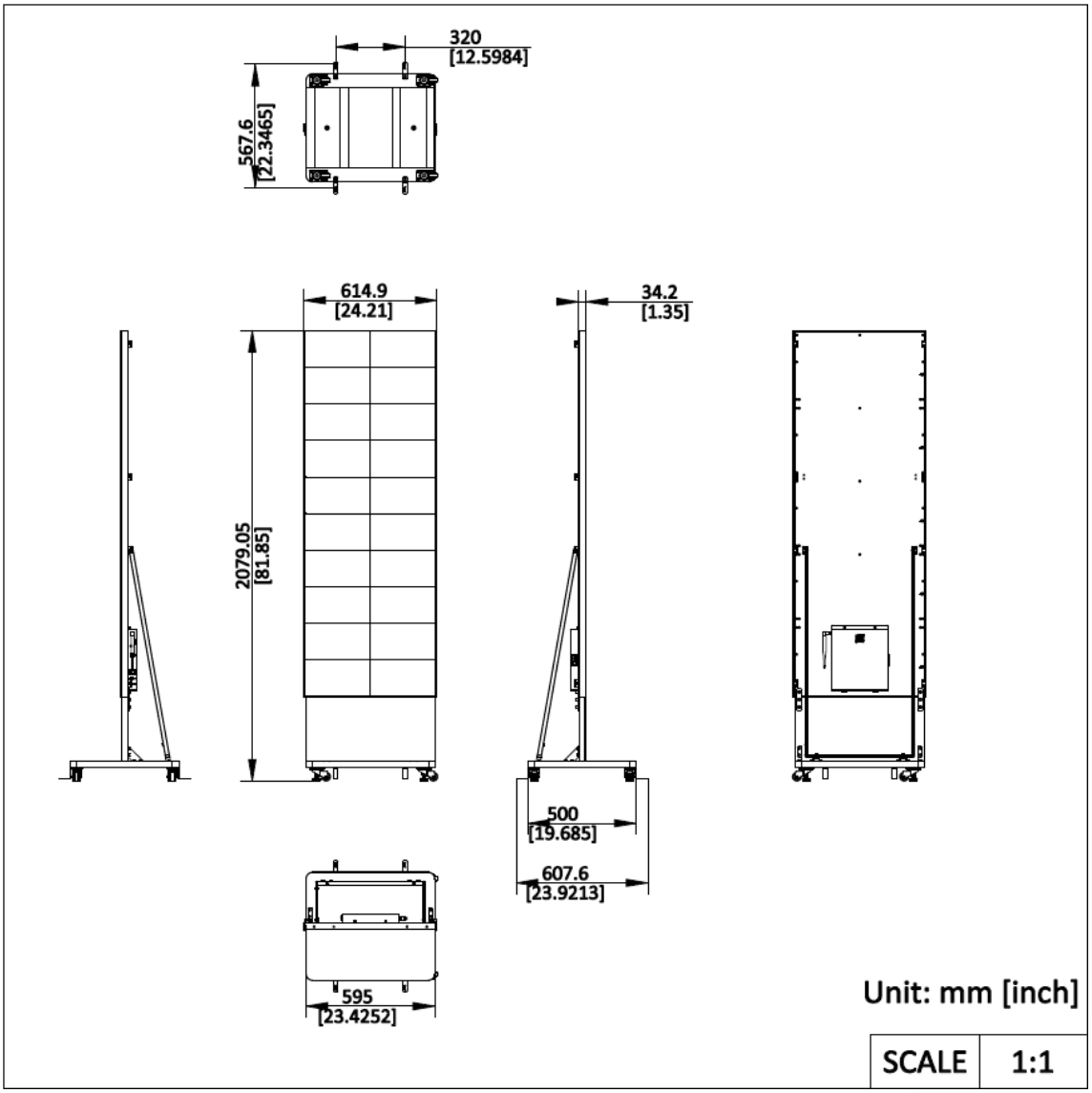

▪ Accessory

▪ Optional

DP-D40XXCB22-0X0-Q0-NS-Q0-TY/PJ	DP-D40XXCB22-0X0-Q0-NS-Q0-MH/PJ	DS-D45CH-1FQ/H	DS-D4512CH-1FQ/A	DS-D45ZJ-CMF/FS

See Far, Go Further

www.hikvision.com
support@hikvision.com

© Hangzhou Hikvision Digital Technology Co., Ltd. Unless otherwise agreed, Hikvision makes no warranties, express or implied. We reserve the right to introduce modifications without notice.

DS-D4515CH-1FQF
DS-D4515CH-1FQF,

The LED Poster Display features an ultra-slim and lightweight design, enhanced by a magnetic butterfly-frame structure for easy installation. It supports seamless splicing of multiple units, enabling both standalone display and quick horizontal combination together. With high brightness and contrast, the display delivers vivid dynamic visuals and ensures excellent image quality from all viewing angles. Multiple installation options are supported, including standard wall-mounting, angled support, and mobile stand setups.

- The cabinet features a highly integrated, lightweight, and streamlined design with a magnetic butterfly-frame, enabling fast horizontal splicing and flexible combinations.
- Incorporates proprietary lossless image processing and ultra-low grayscale control technologies, delivering delicate, smooth visuals and outstanding dynamic color performance.
- Supports multiple remote content management methods, including local control, USB drive input, and PC-based operation.
- Fully self-developed display control system ensures end-to-end stability, security, and controllability. System modules can be easily maintained or replaced, with front-access LED modules supporting single-pixel repairs.
- Allows for multi-unit cascading display with a built-in sending card, eliminating the need for external control devices.
- Multiple installation options available: built-in angled support bracket, mobile stand, wall mount
- Optimized for close-range viewing scenarios with HOB LED panel protection, offering enhanced resistance to moisture, impact, and environmental stress.
- Supports multiple configuration methods including local remote control, software, and web interface, offering more convenient operation.

▪ Specification

Product Model	
Product Model	DS-D4515CH-1FQF
Cabinet	
Pixel configuration	SMD Triad LED (with glue)
Pixel Pitch Category	P1.5
Pixel pitch	1.5625 mm
Lamp Bead Dimensions	1.24 x 1.22 mm
Modules Component	Cabinet × 5, single cabinet LED Module (2 × 2)
Dimensions (W × H × D)	600 (W) mm × 1687.5 (H) mm ×29.5 (D) mm (23.622'' × 66.435'' × 1.161'')
Resolution	384*1080
Area	1.0125 ㎡
Pixel density	409600 dots/㎡
Lamp board housing	Without housing, glue potting
Cabinet material	Diecasting Aluminium
Maintenance method	Front maintenance
Display	
White balance brightness	600 cd/㎡
Color temperature	1700-15000K adjustable
Viewing angle	160°(H)/160°(V)
Contrast ratio	4000 ： 1
Color uniformity	± 0.003Cx ， Cy
Brightness uniformity	≥ 97%
Processing Performance	
Driving method	Constand Current Driving
Frame frequency	60 Hz
Refresh rate	3840 Hz
Grey level	22 bit+
Power	
Input Voltage	100~240 VAC ± 10%
Max. Consumption	≤410 W/㎡(600nit)
Average Consumption	≤136 W/㎡
Working Environment	
Opration Temperature	-10 ℃ ~40 ℃
Operation Humidity	10%~60%RH
Storage humidity	-20 ℃ ~ 60 ℃
Storage temperature	-20 ℃ ~60 ℃
General	
Package Dimension (W × H × D)	2070 (W) mm × 665 (H) mm × 350 (D) mm (81.5 '' × 26.18 '' × 13.78 '')

Accessory	50 LED lamp beads, 10 IC chips, 1 network cable, 1 power cable, 1 HDMI cable, 1 multilingual user manual, 1 remote control, 1 magnetic adjustment rod, 1 cable clip, 1 Phillips screwdriver, 1 hex key wrench, 1 power cable, 2 spare LED modules, 1 spare HUB Board
Gross Weight	90.4 kg/1 in 1 (199.3 lb.)
Net Weight	89.6354 kg/1 in 1 (197.61 lb.)

▪ Available Model

DS-D4515CH-1FQF

▪ Dimension

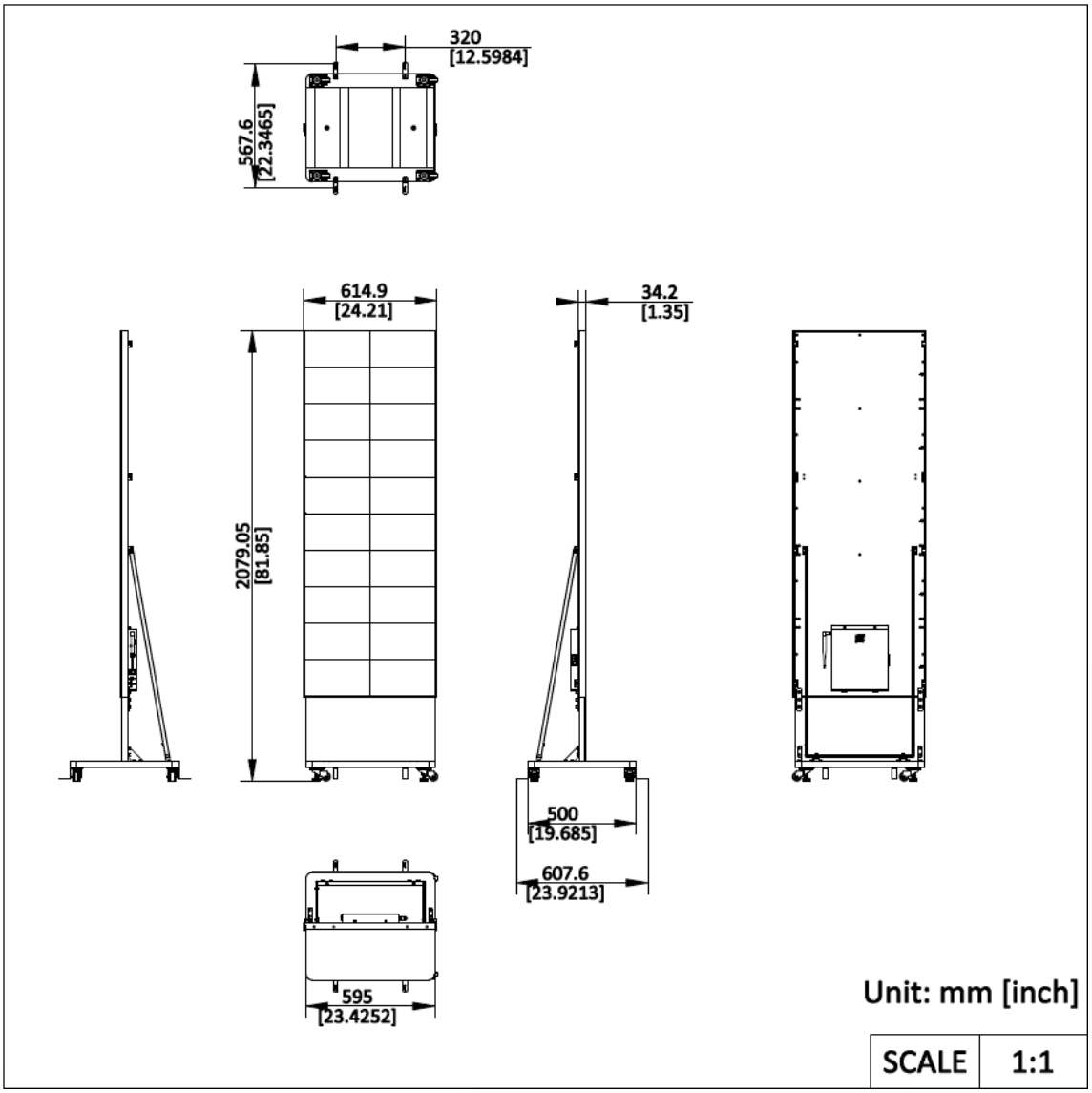

▪ Accessory

▪ Optional

DP-D40XXCB22-0X0-Q0-NS-Q0-TY/PJ	DP-D40XXCB22-0X0-Q0-NS-Q0-MH/PJ	DS-D45CH-1FQ/H	DS-D4515CH-1FQ/A	DS-D45ZJ-CMF/FS

See Far, Go Further

www.hikvision.com
support@hikvision.com

© Hangzhou Hikvision Digital Technology Co., Ltd. Unless otherwise agreed, Hikvision makes no warranties, express or implied. We reserve the right to introduce modifications without notice.

DS-D4518CH-1FQF
DS-D4518CH-1FQF,

The LED Poster Display features an ultra-slim and lightweight design, enhanced by a magnetic butterfly-frame structure for easy installation. It supports seamless splicing of multiple units, enabling both standalone display and quick horizontal combination together. With high brightness and contrast, the display delivers vivid dynamic visuals and ensures excellent image quality from all viewing angles. Multiple installation options are supported, including standard wall-mounting, angled support, and mobile stand setups.

- The cabinet features a highly integrated, lightweight, and streamlined design with a magnetic butterfly-frame, enabling fast horizontal splicing and flexible combinations.
- Incorporates proprietary lossless image processing and ultra-low grayscale control technologies, delivering delicate, smooth visuals and outstanding dynamic color performance.
- Supports multiple remote content management methods, including local control, USB drive input, and PC-based operation.
- Fully self-developed display control system ensures end-to-end stability, security, and controllability. System modules can be easily maintained or replaced, with front-access LED modules supporting single-pixel repairs.
- Allows for multi-unit cascading display with a built-in sending card, eliminating the need for external control devices.
- Multiple installation options available: built-in angled support bracket, mobile stand, wall mount
- Optimized for close-range viewing scenarios with HOB LED panel protection, offering enhanced resistance to moisture, impact, and environmental stress.
- Supports multiple configuration methods including local remote control, software, and web interface, offering more convenient operation.

▪ Specification

Product Model	
Product Model	DS-D4518CH-1FQF
Cabinet	
Pixel configuration	SMD Triad LED (with glue)
Pixel Pitch Category	P1.8
Pixel pitch	1.875mm
Lamp Bead Dimensions	1.6 x 1.6 mm
Modules Component	Cabinet × 5, single cabinet (2 × 2)
Dimensions (W × H × D)	600 (W) mm × 1687.5 (H) mm ×29.5 (D) mm (23.622'' × 66.435'' × 1.161'')
Resolution	320 × 900
Area	1.0125 ㎡
Pixel density	284444dots/㎡
Lamp board housing	Without housing, glue potting
Cabinet material	Diecasting Aluminium
Maintenance method	Front maintenance
Display	
White balance brightness	600 cd/㎡
Color temperature	1700-15000K adjustable
Viewing angle	160°(H)/160°(V)
Contrast ratio	4000 ： 1
Color uniformity	± 0.003Cx ， Cy
Brightness uniformity	≥ 97%
Processing Performance	
Frame frequency	60 Hz
Refresh rate	3840 Hz
Grey level	22 bit+
Power	
Input Voltage	100~240 VAC ± 10%
Max. Consumption	≤430 W/㎡(600nit)
Average Consumption	≤143 W/㎡
Working Environment	
Opration Temperature	-10 ℃ ~40 ℃
Operation Humidity	10%~60%RH
Storage humidity	-20 ℃ ~ 60 ℃
Storage temperature	-20 ℃ ~60 ℃
General	
Package Dimension (W × H × D)	2070 (W) mm × 665 (H) mm × 350 (D) mm (81.5 '' × 26.18 '' × 13.78 '')
Accessory	50 LED lamp beads, 10 IC chips, 1 network cable, 1 power cable, 1 HDMI cable, 1 multilingual user manual, 1 remote control, 1 magnetic adjustment rod, 1 cable clip, 1 Phillips screwdriver, 1 hex key wrench, 1 power cable, 2 spare LED modules, 1 spare HUB Board

Gross Weight	90.4 kg/1 in 1 (199.3 lb.)
Net Weight	89.6354 kg/1 in 1 (197.61 lb.)

▪ Available Model

DS-D4518CH-1FQF

▪ Dimension

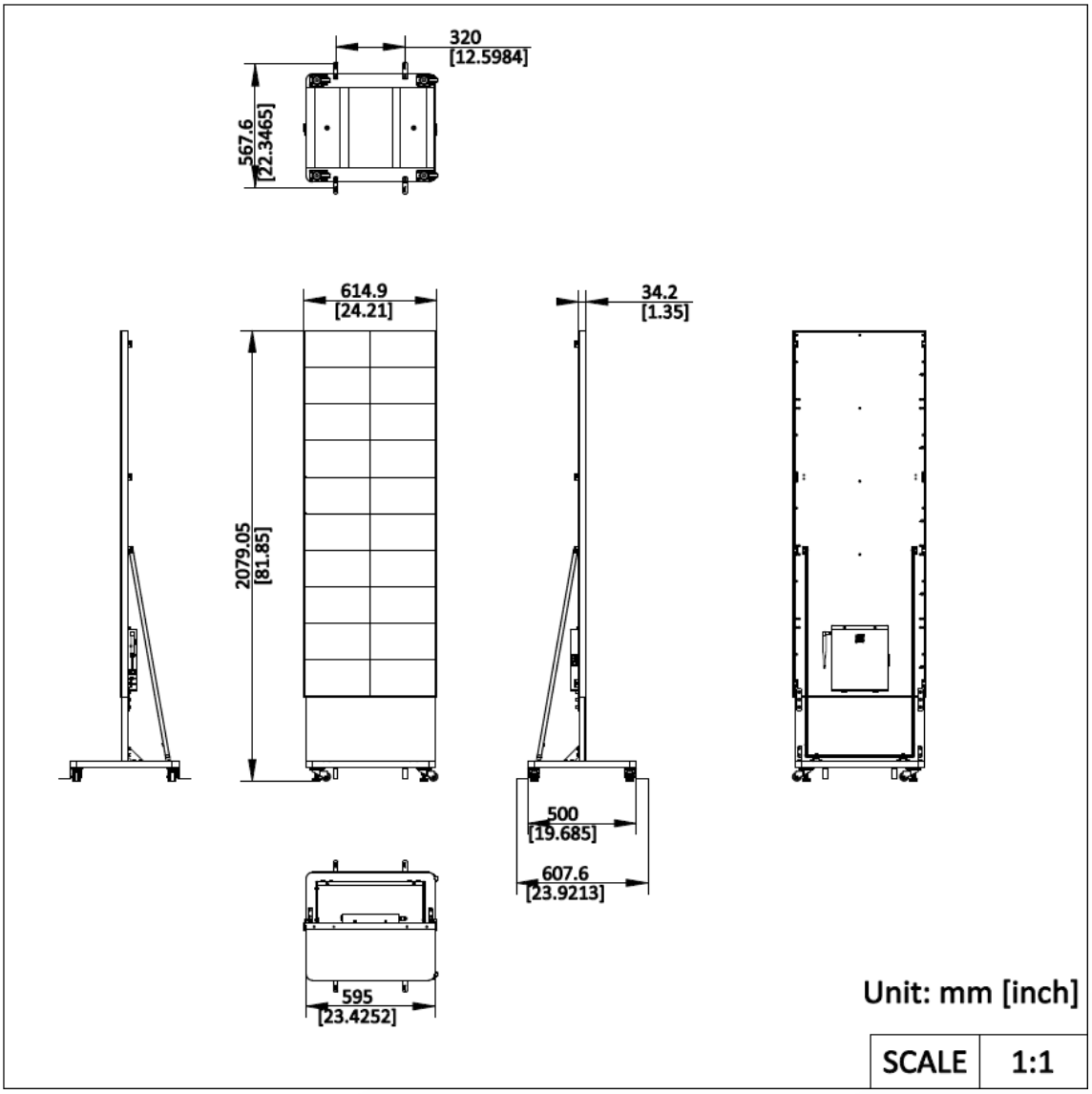

▪ Accessory

▪ Optional

DP-D40XXCB22-0X0-Q0-NS-Q0-TY/PJ	DP-D40XXCB22-0X0-Q0-NS-Q0-MH/PJ	DS-D45CH-1FQ/H	DS-D4518CH-1FQ/A	DS-D45ZJ-CMF/FS

See Far, Go Further

www.hikvision.com
support@hikvision.com

© Hangzhou Hikvision Digital Technology Co., Ltd. Unless otherwise agreed, Hikvision makes no warranties, express or implied. We reserve the right to introduce modifications without notice.