SR598W-HUB2



Mounting Pattern
600 x 600mm

Max Load
300lb (136.1kg)

SMARTMOUNT®

Flat Panel Cart

FOR THE 85" MICROSOFT® SURFACE™ HUB 2S

Peerless-AV's SmartMount® Flat Panel Cart is designed specifically for the 85" Microsoft® Surface™ Hub 2S. Mobility, appealing design, display height adjustment and a pre-assembled base ensure quick assembly, while providing a rigid, but attractive structure that fits into any décor. The 4" casters make it easy to move from room to room safely. The included spacers and custom length bolts provide proper clearance around the 85" Surface Hub 2S compute module.

- Specifically designed for the 85" Microsoft® Surface™ Hub 2S
- Product complies with the Microsoft® Site Readiness Guide and is certified through Microsoft®
- Integrated cable management protects, contains and conceals cables for a clean, professional installation
- Pre-assembled base provides rigidity, stability and quick assembly
- Smooth white powder coat finish provides a durable and hard wearing appearance
- Optional ACC-MS component shelf can be positioned anywhere along either column by simply lifting and repositioning
- Accommodates the 600 x 600mm VESA® mounting pattern of the 85" Microsoft® Surface™ Hub 2S
- Cart includes (4) plastic base pads for instances when casters are not needed



PLUMB ADJUSTMENT
5 degrees of negative adjustment keeps even the heaviest of displays level

OPEN FRAME ADAPTOR
Helps prevent display input interference

VERTICAL ADJUSTMENT
Display and optional component shelf can be located anywhere along the column (up to 60" at centre)

SAFE AND EASY MANOEUVRABILITY
Large 4" (102mm) swivel casters (two locking) allow the cart to move easily on tile or carpet

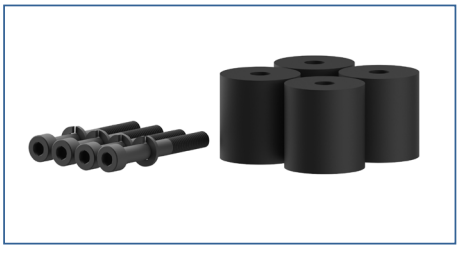

Includes spacer and hardware for 85" Microsoft® Surface™ Hub 2S

Designed for Microsoft Surface

RoHS

Please visit peerless-av.com/en-us/patents for patent information.

info@peerless-av.com
peerless-av.com

peerless-AV®
Driving Technology Through Innovation

Model Numbers

WARRANTY: Limited Lifetime

SR598W-HUB2	SmartMount® Flat Panel Cart for the 85" Microsoft® Surface™ Hub 2S

Product Specifications

	DIMENSIONS (W X H X D)	PRODUCT WEIGHT	LOAD CAPACITY	FINISH	AVAILABLE COLORS
SR598W-HUB2	46.01" x 68.38" x 29.00" (1169 x 1736 x 737mm)	89lb (40.5kg)	300lb (136.1kg) Display	Textured Powder Coat	White

Package Specifications

	PACKAGE SIZE (W x H x D)	PACKAGE SHIP WEIGHT	PACKAGE UPC CODE	PACKAGE CONTENTS	UNITS IN PACKAGE
SR598W-HUB2	47.50" x 12.50" x 38.50" (1207 x 318 x 978mm)	109lb (49.5kg)	735029348795	Assembled Base, (2) Aluminum Columns, Universal Display Adaptor, (2) Swivel Casters, (2) Locking Swivel Casters, (4) Plastic Base Pads, Spacers, Screws and Lock Washers for the 85" Microsoft® Surface™ Hub 2S, Installation Instructions	1

Accessories

ACC310:	Leveling Feet Accessory
ACC316:	Safety Belt
ACC320:	Electrical Outlet Strip with Cord Wrap
ACC-BPR:	Bumper Accessory for Legs
ACC-LA:	Laptop Arm
ACC-UCM:	Universal AV Component Mount
ACC-MS:	Metal Shelf
ACC-VCS:	Video Conferencing Camera Shelf

All dimensions = inch (mm)

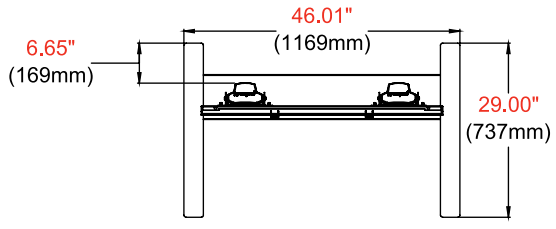

TOP VIEW

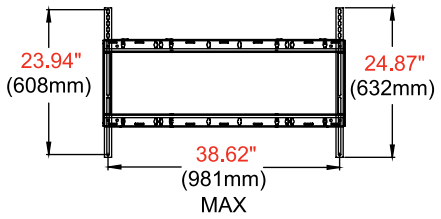

ADAPTOR BRACKET

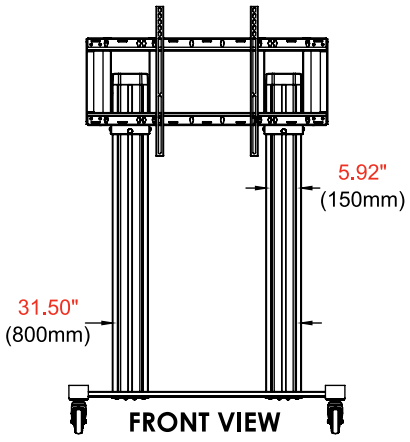

FRONT VIEW

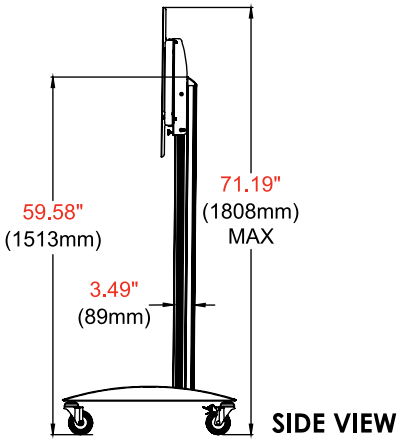

SIDE VIEW

Architect Specifications

The SmartMount® Flat Panel Cart for the 85" Microsoft® Surface™ Hub 2S shall be a Peerless-AV model SR598W-HUB2 and shall be located where indicated on the plans. Assembly and installation shall be done according to instructions provided by the manufacturer.

Visit **peerless-av.com** to see the complete line of AV solutions from Peerless-AV, including outdoor displays, kiosks, display mounts, projector mounts, carts/stands, and a full assortment of accessories.

Peerless-AV
2300 White Oak Circle
Aurora, IL 60502 USA

(800) 865-2112
(630) 375-5100
Fax: (800) 359-6500

Peerless-AV EMEA
Unit 2, Curo Park
St Albans, Herts
AL2 2DD
United Kingdom
+44 (0) 1923 200100
Fax: +44 (0) 1923 200101

Peerless-AV Latin America
Av. de las Industrias 413
Parque Industrial Escobedo
General Escobedo, N.L.,
México, 66062
+52 (81) 8384-8300
Fax: +52 (81) 8384-8360

peerless-AV®
Driving Technology Through Innovation

© 2022 Peerless Industries, Inc. Peerless-AV® and SmartMount® are registered trademarks of Peerless Industries, Inc. All rights reserved.
© 2022 Microsoft. Microsoft, the Microsoft logo, Microsoft Surface, Surface, and the Microsoft Surface logo are trademarks of the Microsoft group of companies. All other trademarks are the property of their respective owners.